Nederlandse norm

NEN-EN-ISO 11690-2
(en)

Akoestiek - Aanbevolen aanpak voor het inrichten van geluidarme werkplekken met machines - Deel 2: Maatregelen (ISO 11690-2:2020,IDT)

Acoustics - Recommended practice for the design of low-noise workplaces containing machinery - Part 2: Noise control measures (ISO 11690-2:2020,IDT)

Vervangt NEN-EN-ISO 11690-2:1997

ICS 13.140
december 2020

Dit document mag slechts op een stand-alone PC worden geïnstalleerd. Gebruik op een netwerk is alleen toegestaan als een aanvullende licentieovereenkomst voor netwerkgebruik met NEN is afgesloten.
This document may only be used on a stand-alone PC. Use in a network is only permitted when a supplementary license agreement for use in a network with NEN has been concluded.

Dit document is door NEN onder licentie verstrekt aan: / This document has been supplied under license by NEN to:
politie.nl thijs.ter.avest@politie.nl 2026-03-06 15:04:00

Als Nederlandse norm is aanvaard:
- EN ISO 11690-2:2020,IDT
- ISO 11690-2:2020,IDT

Normcommissie 302018 'Akoestiek'

THIS PUBLICATION IS COPYRIGHT PROTECTED

DEZE PUBLICATIE IS AUTEURSRECHTELIJK BESCHERMD

Apart from exceptions provided by the law, nothing from this publication may be duplicated and/or published by means of photocopy, microfilm, storage in computer files or otherwise, which also applies to full or partial processing, without the written consent of Stichting Koninklijk Nederlands Normalisatie Instituut.

Stichting Koninklijk Nederlands Normalisatie Instituut shall, with the exclusion of any other beneficiary, collect payments owed by third parties for duplication and/or act in and out of law, where this authority is not transferred or falls by right to Stichting Reprorecht.

Although the utmost care has been taken with this publication, errors and omissions cannot be entirely excluded. Stichting Koninklijk Nederlands Normalisatie Instituut and/or the members of the committees therefore accept no liability, not even for direct or indirect damage, occurring due to or in relation with the application of publications issued by Stichting Koninklijk Nederlands Normalisatie Instituut.

Auteursrecht voorbehouden. Behoudens uitzondering door de wet gesteld mag zonder schriftelijke toestemming van Stichting Koninklijk Nederlands Normalisatie Instituut niets uit deze uitgave worden verveelvoudigd en/of openbaar gemaakt door middel van fotokopie, microfilm, opslag in computerbestanden of anderszins, hetgeen ook van toepassing is op gehele of gedeeltelijke bewerking.

Stichting Koninklijk Nederlands Normalisatie Instituut is met uitsluiting van ieder ander gerechtigd de door derden verschuldigde vergoedingen voor verveelvoudiging te innen en/of daartoe in en buiten rechte op te treden, voor zover deze bevoegdheid niet is overgedragen c.q. rechtens toekomt aan Stichting Reprorecht.

Hoewel bij deze uitgave de uiterste zorg is nagestreefd, kunnen fouten en onvolledigheden niet geheel worden uitgesloten. Stichting Koninklijk Nederlands Normalisatie Instituut en/of de leden van de commissies aanvaarden derhalve geen enkele aansprakelijkheid, ook niet voor directe of indirecte schade, ontstaan door of verband houdend met toepassing van door Stichting Koninklijk Nederlands Normalisatie Instituut gepubliceerde uitgaven.

© 2020 Stichting Koninklijk Nederlands Normalisatie Instituut
www.nen.nl

Dit document is door NEN onder licentie verstrekt aan: / This document has been supplied under license by NEN to:
politie.nl thijs.ter.avest@politie.nl 2026-03-06 15:04:00

EUROPEAN STANDARD

NORME EUROPÉENNE

EUROPÄISCHE NORM

EN ISO 11690-2

November 2020

ICS 13.140

Supersedes EN ISO 11690-2:1996

English Version

Acoustics - Recommended practice for the design of low-noise workplaces containing machinery - Part 2: Noise control measures (ISO 11690-2:2020)

Acoustique - Pratique recommandée pour la conception de lieux de travail à bruit réduit contenant des machines - Partie 2: Moyens de maîtrise du bruit (ISO 11690-2:2020)

Akustik - Richtlinien für die Gestaltung lärmarmer maschinenbestückter Arbeitsstätten - Teil 2: Lärmminderungsmaßnahmen (ISO 11690-2:2020)

This European Standard was approved by CEN on 17 October 2020.

CEN members are bound to comply with the CEN/CENELEC Internal Regulations which stipulate the conditions for giving this European Standard the status of a national standard without any alteration. Up-to-date lists and bibliographical references concerning such national standards may be obtained on application to the CEN-CENELEC Management Centre or to any CEN member.

This European Standard exists in three official versions (English, French, German). A version in any other language made by translation under the responsibility of a CEN member into its own language and notified to the CEN-CENELEC Management Centre has the same status as the official versions.

CEN members are the national standards bodies of Austria, Belgium, Bulgaria, Croatia, Cyprus, Czech Republic, Denmark, Estonia, Finland, France, Germany, Greece, Hungary, Iceland, Ireland, Italy, Latvia, Lithuania, Luxembourg, Malta, Netherlands, Norway, Poland, Portugal, Republic of North Macedonia, Romania, Serbia, Slovakia, Slovenia, Spain, Sweden, Switzerland, Turkey and United Kingdom.

EUROPEAN COMMITTEE FOR STANDARDIZATION
COMITÉ EUROPÉEN DE NORMALISATION
EUROPÄISCHES KOMITEE FÜR NORMUNG

CEN-CENELEC Management Centre: Rue de la Science 23, B-1040 Brussels

© 2020 CEN All rights of exploitation in any form and by any means reserved worldwide for CEN national Members.

Ref. No. EN ISO 11690-2:2020 E

Dit document is door NEN onder licentie verstrekt aan: / This document has been supplied under license by NEN to:
politie.nl thijs.ter.avest@politie.nl 2026-03-06 15:04:00

Contents

Page

European foreword **3**

Dit document is door NEN onder licentie verstrekt aan: / This document has been supplied under license by NEN to:
politie.nl thijs.ter.avest@politie.nl 2026-03-06 15:04:00

European foreword

This document (EN ISO 11690-2:2020) has been prepared by Technical Committee ISO/TC 43 "Acoustics" in collaboration with Technical Committee CEN/TC 211 “Acoustics” the secretariat of which is held by DIN.

This European Standard shall be given the status of a national standard, either by publication of an identical text or by endorsement, at the latest by May 2021, and conflicting national standards shall be withdrawn at the latest by May 2021.

Attention is drawn to the possibility that some of the elements of this document may be the subject of patent rights. CEN shall not be held responsible for identifying any or all such patent rights.

This document supersedes EN ISO 11690-2:1996.

According to the CEN-CENELEC Internal Regulations, the national standards organizations of the following countries are bound to implement this European Standard: Austria, Belgium, Bulgaria, Croatia, Cyprus, Czech Republic, Denmark, Estonia, Finland, France, Germany, Greece, Hungary, Iceland, Ireland, Italy, Latvia, Lithuania, Luxembourg, Malta, Netherlands, Norway, Poland, Portugal, Republic of North Macedonia, Romania, Serbia, Slovakia, Slovenia, Spain, Sweden, Switzerland, Turkey and the United Kingdom.

Endorsement notice

The text of ISO 11690-2:2020 has been approved by CEN as EN ISO 11690-2:2020 without any modification.

Dit document is door NEN onder licentie verstrekt aan: / This document has been supplied under license by NEN to:
politie.nl thijs.ter.avest@politie.nl 2026-03-06 15:04:00

Dit document is door NEN onder licentie verstrekt aan: / This document has been supplied under license by NEN to:
politie.nl thijs.ter.avest@politie.nl 2026-03-06 15:04:00

INTERNATIONAL STANDARD

ISO 11690-2

Second edition
2020-10

Acoustics — Recommended practice for the design of low-noise workplaces containing machinery —

Part 2: Noise control measures

Acoustique — Pratique recommandée pour la conception de lieux de travail à bruit réduit contenant des machines —

Partie 2: Moyens de maîtrise du bruit

Reference number
ISO 11690-2:2020(E)

© ISO 2020

Dit document is door NEN onder licentie verstrekt aan: / This document has been supplied under license by NEN to:
politie.nl thijs.ter.avest@politie.nl 2026-03-06 15:04:00

COPYRIGHT PROTECTED DOCUMENT

© ISO 2020

All rights reserved. Unless otherwise specified, or required in the context of its implementation, no part of this publication may be reproduced or utilized otherwise in any form or by any means, electronic or mechanical, including photocopying, or posting on the internet or an intranet, without prior written permission. Permission can be requested from either ISO at the address below or ISO's member body in the country of the requester.

ISO copyright office
CP 401 • Ch. de Blandonnet 8
CH-1214 Vernier, Geneva
Phone: +41 22 749 01 11
Email: copyright@iso.org
Website: www.iso.org

Published in Switzerland

© ISO 2020 – All rights reserved

Dit document is door NEN onder licentie verstrekt aan: / This document has been supplied under license by NEN to:
politie.nl thijs.ter.avest@politie.nl 2026-03-06 15:04:00

Contents

Page

Foreword ... **iv**

Introduction ... **v**

1 Scope ... **1**

2 Normative references ... **1**

3 Terms and definitions ... **1**

4 Technical aspects of noise control ... **1**

5 Noise control at source ... **3**
- 5.1 General ... 3
- 5.2 Noise control at source by design ... 3
- 5.3 Information on noise emission ... 4
- 5.4 Use of low-noise machines ... 4
- 5.5 Modification or replacement of machine components ... 7
- 5.6 Low noise working and production technologies ... 8
- 5.7 Maintenance of machines and noise control devices ... 8

6 Noise control on the transmission path ... **8**
- 6.1 Noise control by means of a proper spatial arrangement of the noise sources ... 8
- 6.2 Use of noise control devices ... 8
- 6.3 Noise control by use of sound-absorbing materials ... 8
- 6.4 Sound propagation in structures and noise control measures ... 11

7 Noise control at the work station ... **11**

8 Verification methods ... **12**
- 8.1 General ... 12
- 8.2 Sound sources ... 12
- 8.3 Noise control devices ... 12
- 8.4 Workroom ... 12
- 8.5 Specified positions, work stations ... 12

9 New technologies ... **13**

Annex A (informative) **Modification or replacement of machine components** ... **14**

Annex B (informative) **Arrangement of sound sources** ... **16**

Annex C (informative) **Enclosures** ... **17**

Annex D (informative) **Silencers** ... **20**

Annex E (informative) **Noise barriers and screens in rooms** ... **21**

Annex F (informative) **Acoustical treatment of surfaces** ... **22**

Annex G (informative) **Structure-borne sound insulation** ... **24**

Annex H (informative) **Airborne sound insulation of partitions** ... **25**

Annex I (informative) **Noise control at the work station** ... **26**

Annex J (informative) **Example of a new technology** ... **27**

Bibliography ... **29**

© ISO 2020 – All rights reserved

Dit document is door NEN onder licentie verstrekt aan: / This document has been supplied under license by NEN to:
politie.nl thijs.ter.avest@politie.nl 2026-03-06 15:04:00

Foreword

ISO (the International Organization for Standardization) is a worldwide federation of national standards bodies (ISO member bodies). The work of preparing International Standards is normally carried out through ISO technical committees. Each member body interested in a subject for which a technical committee has been established has the right to be represented on that committee. International organizations, governmental and non-governmental, in liaison with ISO, also take part in the work. ISO collaborates closely with the International Electrotechnical Commission (IEC) on all matters of electrotechnical standardization.

The procedures used to develop this document and those intended for its further maintenance are described in the ISO/IEC Directives, Part 1. In particular, the different approval criteria needed for the different types of ISO documents should be noted. This document was drafted in accordance with the editorial rules of the ISO/IEC Directives, Part 2 (see www.iso.org/directives).

Attention is drawn to the possibility that some of the elements of this document may be the subject of patent rights. ISO shall not be held responsible for identifying any or all such patent rights. Details of any patent rights identified during the development of the document will be in the Introduction and/or on the ISO list of patent declarations received (see www.iso.org/patents).

Any trade name used in this document is information given for the convenience of users and does not constitute an endorsement.

For an explanation of the voluntary nature of standards, the meaning of ISO specific terms and expressions related to conformity assessment, as well as information about ISO's adherence to the World Trade Organization (WTO) principles in the Technical Barriers to Trade (TBT), see www.iso.org/iso/foreword.html.

This document was prepared by Technical Committee ISO/TC 43, *Acoustics*, Subcommittee SC 1, *Noise*, in collaboration with the European Committee for Standardization (CEN) Technical Committee CEN/TC 211, *Acoustics*, in accordance with the Agreement on technical cooperation between ISO and CEN (Vienna Agreement).

This second edition cancels and replaces the first edition (ISO 11690-2:1996), of which it constitutes a minor revision. The changes compared to the previous edition are editorial.

A list of all parts in the ISO 11690 series can be found on the ISO website.

Any feedback or questions on this document should be directed to the user's national standards body. A complete listing of these bodies can be found at www.iso.org/members.html.

© ISO 2020 – All rights reserved
Dit document is door NEN onder licentie verstrekt aan: / This document has been supplied under license by NEN to:
politie.nl thijs.ter.avest@politie.nl 2026-03-06 15:04:00

Introduction

Several standards specify methods for measurement and/or evaluation of noise. The final objective of the ISO 11690 series is noise reduction.

A number of noise control measures are offered. However, in order to be effective, the most appropriate noise control measure(s) should be chosen for a given situation.

It is important when non-acoustic engineers are involved in noise control practice for these engineers to have a basic knowledge of noise emission and propagation characteristics and to understand the basic principles of noise control.

To assist in the development of noise control in the workplace, it is essential that the information contained in these recommended practices is disseminated through International Standards.

In order to reduce noise as a hazard in the workplace, individual countries have produced national legislation. Generally, such national legislation requires noise control measures to be carried out in order to achieve the lowest reasonable levels of noise emission, noise immission and noise exposure, taking into account:

— known available measures;

— the state of the art regarding technical progress;

— the treatment of noise at source;

— appropriate planning, procurement and installation of machines and equipment.

This document, together with the two other parts in the series, outlines procedures to be considered when dealing with noise control at workplaces, within workrooms and in the open. These recommended practices give in relatively simple terms the basic information necessary for all parties involved in noise control in workplaces and in the design of low-noise workplaces to promote the understanding of the desired noise control requirements.

The purpose of the ISO 11690 series is to bridge the gap between existing literature on noise control and the practical implementation of noise control measures. In principle, the series applies to all workplaces and its main functions are:

— to provide simple, brief information on some aspects of noise control in workplaces;

— to act as a guide to help in the understanding of requirements in standards, directives, textbooks, manuals, reports and other specialized technical documents;

— to provide assistance in decision making when assessing the various measures available.

The ISO 11690 series should be useful to persons such as plant personnel, health and safety officers, engineers, managers, staff in planning and purchasing departments, architects and suppliers of plants, machines and equipment. However, the above-mentioned parties should keep in mind that adherence to the recommendations of the ISO 11690 series is not all that is necessary to create a safe workplace.

The effects of noise on health, well-being and human activity are many. By giving guidelines for noise control strategies and measures, the ISO 11690 series aims at a reduction of the impact of noise on human beings at workplaces. Assessment of the impact of noise on human beings is dealt with in other documents.

© ISO 2020 – All rights reserved

Dit document is door NEN onder licentie verstrekt aan: / This document has been supplied under license by NEN to:
politie.nl thijs.ter.avest@politie.nl 2026-03-06 15:04:00

Dit document is door NEN onder licentie verstrekt aan: / This document has been supplied under license by NEN to:
politie.nl thijs.ter.avest@politie.nl 2026-03-06 15:04:00

INTERNATIONAL STANDARD **ISO 11690-2:2020(E)**

Acoustics — Recommended practice for the design of low-noise workplaces containing machinery —

Part 2: Noise control measures

1 Scope

This document deals with the technical aspects of noise control in workplaces. The various technical measures are stated, the related acoustical quantities described, the magnitude of noise reduction discussed, and the verification methods outlined.

This document deals only with audible sound.

2 Normative references

The following documents are referred to in the text in such way that some or all of their content constitutes requirements of this document. For dated references, only the edition cited applies. For undated references, the latest edition of the referenced document (including any amendments) applies.

ISO 11690-1:2020, *Acoustics — Recommended practice for the design of low-noise workplaces containing machinery — Part 1: Noise control strategies*

3 Terms and definitions

For the purposes of this document, the terms and definitions given in ISO 11690-1 apply.

ISO and IEC maintain terminological databases for use in standardization at the following addresses:

— ISO Online browsing platform: available at https://www.iso.org/obp

— IEC Electropedia: available at http://www.electropedia.org/

4 Technical aspects of noise control

Noise reduction measures can be applied at source (emission), between the source and the receiver (transmission path), and at the work station (receiver) (see Figure 1).

When dealing with the noise emission of a machine, an installation or a production process, etc., all possible noise reduction measures should be considered (see Clause 5 and ISO 11690-1). To determine whether noise emission is the lowest level feasible, it is necessary to consider noise emission quantities; these are given in the noise emission declaration (see ISO 11690-1:2020, Clause 8) or determined by measurements (carried out in compliance with the relevant standard).

An assessment of noise control devices such as enclosures, partial enclosures, barriers and screens, silencers, etc. can be carried out by using, for example, the insertion loss data (see 6.2).

The acoustic quality of workrooms and buildings is assessed with reference to the sound insulation regarding airborne and structure-borne sound (see 6.4), and that of workrooms with reference to sound propagation parameters (see 6.3).

© ISO 2020 – All rights reserved

Dit document is door NEN onder licentie verstrekt aan: / This document has been supplied under license by NEN to:
politie.nl thijs.ter.avest@politie.nl 2026-03-06 15:04:00

The overall effectiveness of noise control measures is determined from the noise immission values at the work stations.

Generally, people located at a work station or in the vicinity of a machine are affected by the direct noise emitted by the machine. Therefore, to reduce noise in the workplace, the most effective solution is to reduce noise at source (primary measures). Additional measures on the transmission paths (secondary measures) may be impractical because they hinder the work task and the production process. When assessing the state of noise reduction technology, low noise emission of sound sources is therefore given high priority with regard to occupational safety.

The basic aspects of noise control (see also ISO 11690-1) are illustrated in Figure 1. These are reviewed in Clauses 5 to 7.

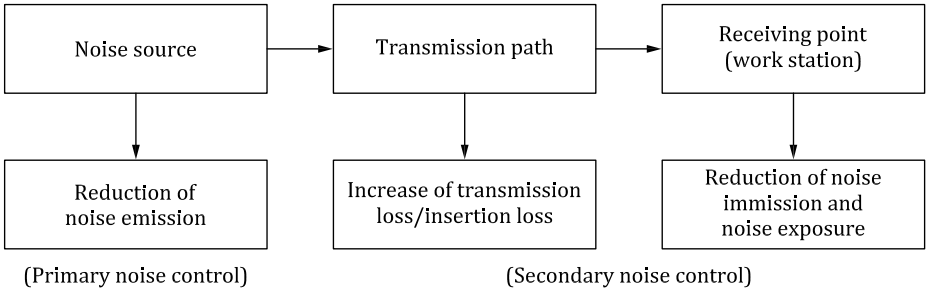

Figure 1 — Basic aspects of noise control

In order to minimize noise at the workplace, all noise control measures should be considered (see Figure 2).

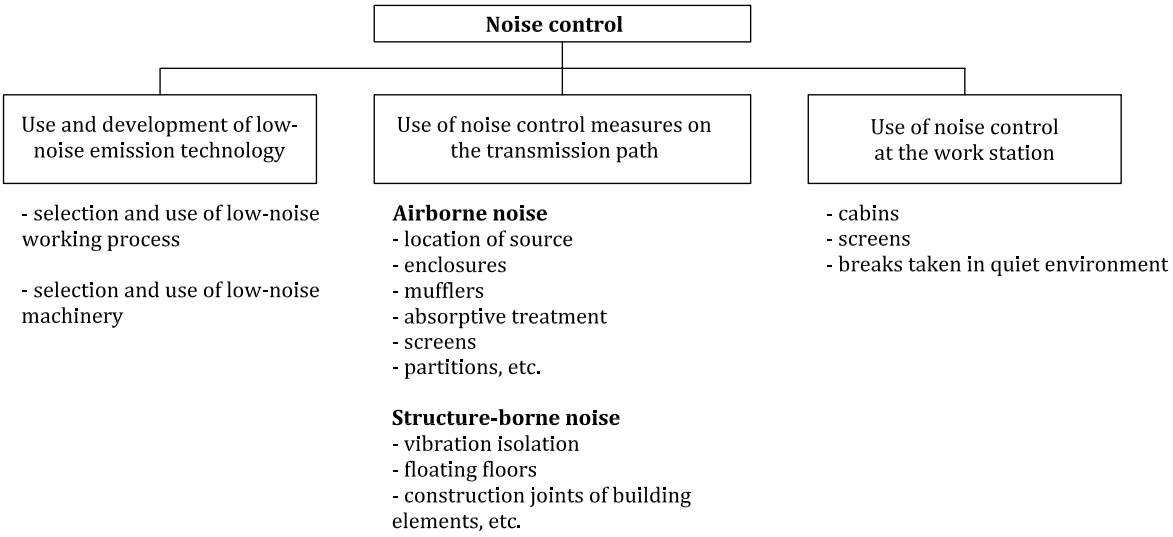

Figure 2 — Steps for the implementation of noise control measures

Noise control is most effective if it is carried out when planning, modifying, changing existing machinery or equipment, or when acquiring new machinery or equipment in plants, workrooms and buildings. From the outset, all parties involved (see ISO 11690-1:2020, Clause 6) and, in particular, the noise experts, should take part in the process. Noise control measures are most effective if they are integrated at the design stage of machines, production processes, workrooms and tasks (see ISO 11690-1:2020, Clause 7). Machine operation, material transport, safety technology, ergonomics and environmental protection should also be considered at that stage.

© ISO 2020 – All rights reserved
Dit document is door NEN onder licentie verstrekt aan: / This document has been supplied under license by NEN to:
politie.nl thijs.ter.avest@politie.nl 2026-03-06 15:04:00

5 Noise control at source

5.1 General

The measures described in this clause deal with the reduction of noise generated by working processes and machines. They should be implemented at the design stage because retrospective measures can affect operational requirements and are generally more expensive. However, they are also recommended for existing noise sources, when practicable.

Control of noise at its source in workplaces deals in particular with the noise reduction of existing machines, the development and selection of low noise working processes and production technologies, the replacement of machine parts and the assessment of the results obtained.

The effectiveness of noise control at its source is based on measurements and is assessed by comparison with the noise emission data, for example, provided by the supplier/manufacturer (see ISO 11690-1:2020, Clause 8).

5.2 Noise control at source by design

When machine noise (or noise from technical production equipment) is considered, two types of noise generation should be distinguished: fluid dynamic noise generation (gas and/or liquid) and mechanical generation.

Fluid dynamic noise arises from temporary fluctuations in pressure and velocity of fluids. Examples are combustion processes, fans, blow-out openings and hydraulic systems.

Mechanically-generated noise is caused by vibrations of machine components that are excited by dynamic forces which are generated, for example, by impacts or out-of-balance masses. The vibrations are transmitted to noise-radiating surfaces, such as machine casing, workpieces, etc. Examples are tooth-wheel gears, electric motors, hammers, shakers and mechanical presses (see Figure 3).

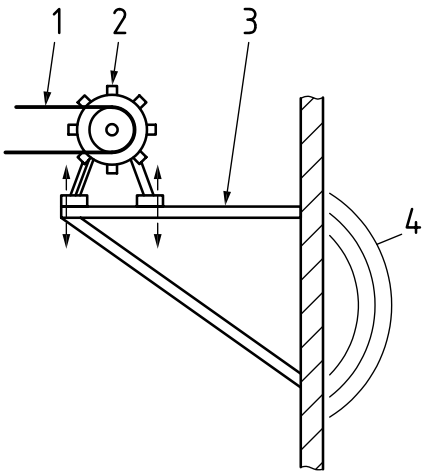

Key

1 excitation

2 machine

3 transmission

4 radiation

Figure 3 — Generation process of mechanical noise

In order to control noise at its source, the noise-generation mechanism should be taken into account.

© ISO 2020 – All rights reserved

Dit document is door NEN onder licentie verstrekt aan: / This document has been supplied under license by NEN to:
politie.nl thijs.ter.avest@politie.nl 2026-03-06 15:04:00

Examples of reduction of fluid dynamic noise are the following:

a) reduction of periodical pressure fluctuations at the excitation source (e.g. in-line hydraulic dampers);

b) reduction of flow velocities (e.g. speed-controlled fans);

c) avoidance of sudden changes in pressure (e.g. graduated vs abrupt transitions in HVAC ducting);

d) effective design of through-flow components (e.g. design layouts that do not put obstacles immediately in front of air movers).

Examples of reduction of mechanically-generated noise are the following:

e) reduction of exciting dynamic forces (e.g. by means of elastic layers to extend the impulse duration of impacts);

f) reduction of the vibrational velocity of the machine structure at the excitation point for a given dynamic force [e.g. by means of stiffeners or additional masses (inertia blocks)];

g) reduction of the vibration (structure-borne sound) transmission from the excitation point to the sound-radiating surfaces [e.g. by using elastic elements and materials with high internal damping (cast iron)];

h) reduction of the sound radiated by a vibrating structure, for example by use of

   — thin walls with ribs instead of thick stiff walls,

   — damping layers on thin metal sheets,

   — perforated metal sheets (provided noise insulation is not required);

i) sound-insulating wrappings or thick-walled structures (thin damped metal sheets near the radiating surface).

Further information on reducing noise at its source can be found in ISO/TR 11688-1 and ISO/TR 11688-2.

5.3 Information on noise emission

In addition to the information on noise emission given by suppliers/manufacturers in technical documentation (see ISO 11690-1:2020, Clause 8), there may be measures specific to industrial sectors. Information on such measures can be found in databases, professional magazines, trade association journals, etc.

For some machine families, there are lists of noise emission data obtained under specified operating conditions. These lists can help purchasers select low-noise machines/equipment (see ISO 11690-1:2020, Annex A).

5.4 Use of low-noise machines

In some circumstances, rather than implementing costly retrospective noise control measures, it is feasible to replace a noisy unit in a plant with a low-noise one (see Table 1).

© ISO 2020 – All rights reserved
Dit document is door NEN onder licentie verstrekt aan: / This document has been supplied under license by NEN to:
politie.nl thijs.ter.avest@politie.nl 2026-03-06 15:04:00

Table 1 — Examples of alternative processes with lower noise

High-noise processes	Low-noise processes
Percussion riveting	Compression and roll riveting
Drive by compressed air or internal combustion engine	Electrical drive
Cutting or making holes in, for example, stone or concrete by the use of pneumatic or internal combustion percussive machines	Use of machines that can be fitted with drills or circular saw blades equipped with diamond teeth
Heading in the die	Tapering/full-forward extrusion
Push cutting	Pull cutting
Flow drying	Radiation drying
Plasma oxygen cutting	Plasma cutting under water
Cutting shock, punching	Laser-beam cutting
Conventional TIG/TAG welding	TIG/TAG shielded arc welding
Flame-hardening	Laser-beam hardening
Fastening with rivets	Pressure fixing
Stroke forming	Hydraulic pressing
Spot welding	Seam welding
NOTE 1 A change of the material and/or form of the component under manufacture may allow the use of low-noise production processes. NOTE 2 This list is by no means exhaustive.	

There are also noisy operations which are not connected with fixed machines, for example from the use of hand-held tools. These can often be the dominating noise sources in a workroom. If care is taken in selecting the tools or the working arrangement (e.g. sound-deadened hammers, cushioned work tables, low-noise grinding discs, magnetic damping mats, etc.), considerable noise reductions can be achieved as shown in Figures 4 to 7.

© ISO 2020 – All rights reserved

Dit document is door NEN onder licentie verstrekt aan: / This document has been supplied under license by NEN to:
politie.nl thijs.ter.avest@politie.nl 2026-03-06 15:04:00

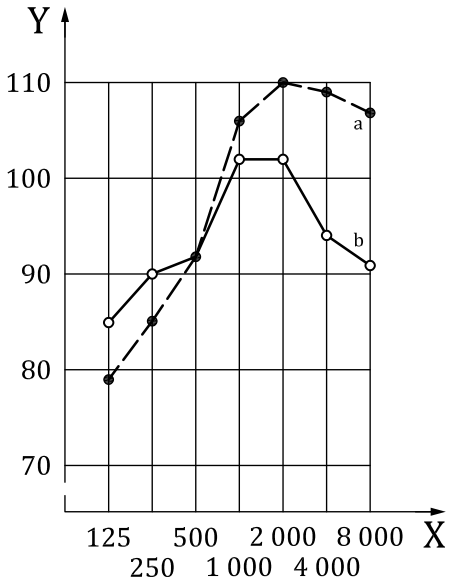

Key

X octave-band frequency, in Hz

Y A-weighted sound pressure level at the work station, in dB

a Conventional steelhammer, L_{pA} = 115 dB.

b Sound-deadened hammer (with little recoil), L_{pA} = 107 dB.

Figure 4 — Example of sound pressure level during hammering

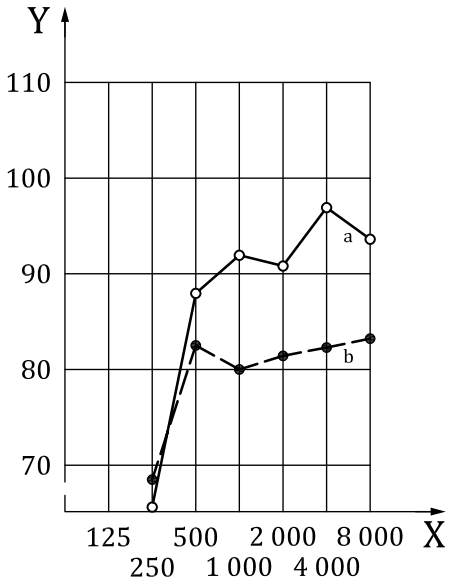

Key

X octave-band frequency, in Hz

Y A-weighted sound pressure level at the work station, in dB

a Hard grinding wheel, L_{pA} = 100 dB.

b Bonded abrasive grinding wheel, L_{pA} = 89 dB.

Figure 5 — Example of sound pressure level when grinding during the cleaning of a cast iron electromotor housing

© ISO 2020 – All rights reserved
Dit document is door NEN onder licentie verstrekt aan: / This document has been supplied under license by NEN to:
politie.nl thijs.ter.avest@politie.nl 2026-03-06 15:04:00

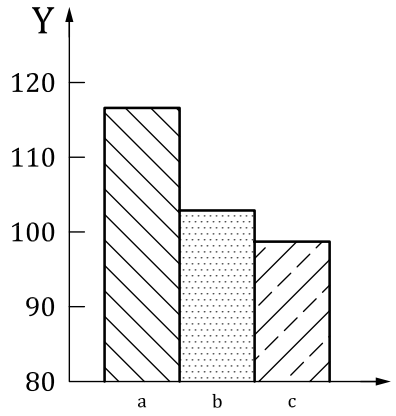

Key

Y A-weighted sound pressure level, in dB

a Steel working plate, 25 mm thick.

b Steel working plate, damped by viscous material, 40 mm thick.

c Steel working plate, 200 mm thick.

Figure 6 — Example of sound pressure level when hammering

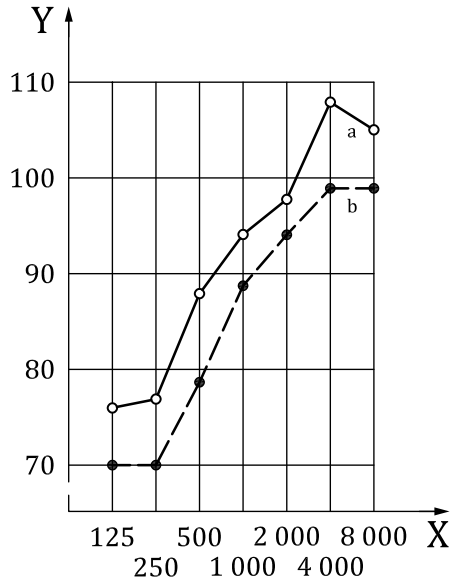

Key

X octave-band frequency, in Hz

Y A-weighted sound pressure level at the work station, in dB

a Without magnetic mat, L_{pA} = 111 dB.

b With magnetic mat, L_{pA} = 102 dB.

Figure 7 — Example of sound pressure level when grinding a steel plate

5.5 Modification or replacement of machine components

It is possible, by replacing or modifying machine components, to reduce noise transmission inside the machine and noise radiation by the machine surface, without affecting performance. Annex A gives examples of such noise reduction measures.

© ISO 2020 – All rights reserved

Dit document is door NEN onder licentie verstrekt aan: / This document has been supplied under license by NEN to:
politie.nl thijs.ter.avest@politie.nl 2026-03-06 15:04:00

5.6 Low noise working and production technologies

It is always beneficial, if feasible, to replace a particularly noisy machine or unit in a plant with a quieter one, for example by using a machine that works to a different principle (e.g. replacing an impact screwdriver by a continuous direct-driven screwdriver).

With regard to existing processes, particular attention should be paid to the possibility of substituting the process with an equally effective but quieter method.

When substituting a production process, low-noise alternatives should be systematically searched for.

The successive replacement of machines, plant items and processes by less noisy ones will in the long term lead to quieter working environments even though low-noise machines have to be positioned alongside existing noisy ones.

5.7 Maintenance of machines and noise control devices

Noise emission levels from machines or processes can be unnecessarily high due to lack of maintenance, poor lubrication, misalignment, unbalanced and loose parts, etc. Optimum operating conditions should be maintained at all times. Any maintenance defect normally increases the noise levels.

Maintenance of noise control devices is also of prime importance. Therefore, the integrity of enclosures, screens and silencers should be carefully monitored.

6 Noise control on the transmission path

6.1 Noise control by means of a proper spatial arrangement of the noise sources

An optimized spatial arrangement of machines can provide a substantial noise level reduction at work stations. This is mainly applicable when planning new plants and installations but should also be considered for existing plants.

Noise reduction can be obtained by increasing the distance between the noise sources and the work stations (see Annex B).

6.2 Use of noise control devices

Enclosures (see Annex C), silencers (see Annex D) and screens (see Annex E) can be effective measures for the reduction of the noise emitted from machines, installations, piping systems and openings.

An enclosure is a structure completely surrounding the machine or installation. It consists mainly of a sound-insulating shell (metal, wood, concrete, etc.) with and without an internal sound-absorbing lining. The achievable noise reduction depends on the insulation of airborne sound provided by the shell and on the degree of absorption by the internal surface of the enclosure if absorption exists. In practice, it is limited by openings, ineffective seals and by transmission of structure-borne sound. This limitation can be minimized by using measures such as silenced openings.

The effectiveness of noise control by using enclosures, silencers or screens can be measured and assessed by the insertion loss, the transmission loss and the reduction of sound level (see ISO 11690-1:2020, Clause 3, for definitions).

6.3 Noise control by use of sound-absorbing materials

The relationship between noise emission and noise immission is determined by sound propagation (see ISO/TR 11690-3). Sound propagation and therefore the acoustical quality of a room are influenced by the treatment of surfaces (ceiling and walls) by using sound-absorbing materials, which should be selected in relation to the frequency spectrum of the noise. For attenuation of noise at low frequencies, the use of absorptive materials is less effective.

© ISO 2020 – All rights reserved
Dit document is door NEN onder licentie verstrekt aan: / This document has been supplied under license by NEN to:
politie.nl thijs.ter.avest@politie.nl 2026-03-06 15:04:00

Noise in rooms consists of direct noise from sources and reflected noise from room boundaries (floors, walls, ceilings, other equipment, fittings, etc.). Absorptive surface treatment reduces exclusively the reflected noise.

It is possible to assess the acoustical quality of a room and therefore the effectiveness of a surface treatment by using the sound propagation quantities, e.g. the rate of spatial decay (DL_2) and the excess (DL_f) of sound pressure levels. These quantities are derived from the spatial sound distribution curves (see ISO 11690-1 for definitions and also ISO/TR 11690-3). Recommended values of DL_2 are given in ISO 11690-1:2020, Table 3 (see also Table 2 of this document). The assessment can be made from quantities measured (see Clause 8) or calculated using noise-prediction methods (see ISO/TR 11690-3).

Table 2 — Typical values for the mean sound absorption coefficient $\bar{\alpha}$ and sound propagation descriptors DL_f and DL_2 in the middle region

Description of rooms	$\bar{\alpha}$	DL_f dB	DL_2 dB
With small/intermediate volume (V < 10 000 m^3 and h < 5 m) without absorbing ceiling, empty	<0,2	8 to 13	1 to 3
With large volume (V ≥ 10 000 m^3 and h ≥ 5 m) without absorbing ceiling, with fittings	0,2	6 to 9	2,5 to 4
All rooms with absorbing ceiling, with fittings	>0,3	5 to 8	3,5 to 5

NOTE DL_f is the excess of sound pressure level. DL_2 is the rate of spatial decay of sound pressure levels per distance doubling. See ISO 11690-1 for definitions.

The acoustical quality of a room is best if DL_f is low and DL_2 is high. Typical values for average sound absorption coefficient and for sound propagation parameters DL_2 and DL_f are given in Table 2 for different types of rooms and surface treatments.

Generally, industrial noise lies in the frequency range 500 Hz to 2 000 Hz. In such situations, the following reductions in sound pressure level relative to rooms with hard walls and ceiling may be achieved.

a) In the near region, the reduction of the A-weighted sound pressure level is in the range 1 dB to 3 dB because surface treatment has very little effect (see ISO 11690-1 for definitions).

b) In the middle region, this reduction is usually between 3 dB and 8 dB.

c) In the far region, it usually lies between 5 dB and 12 dB, depending on the room dimensions and the extent of wall treatment and fittings.

In order to assess the effectiveness of a surface treatment outside the direct field, distinction should be made between rooms with and without diffuse field conditions (see ISO 11690-1 for definitions and also Annex F and ISO/TR 11690-3).

Typical spatial sound distribution curves in rooms of different shapes and sizes before and after installation of a variety of surface treatments are given in Figures 8 and 9.

© ISO 2020 – All rights reserved

Dit document is door NEN onder licentie verstrekt aan: / This document has been supplied under license by NEN to:
politie.nl thijs.ter.avest@politie.nl 2026-03-06 15:04:00

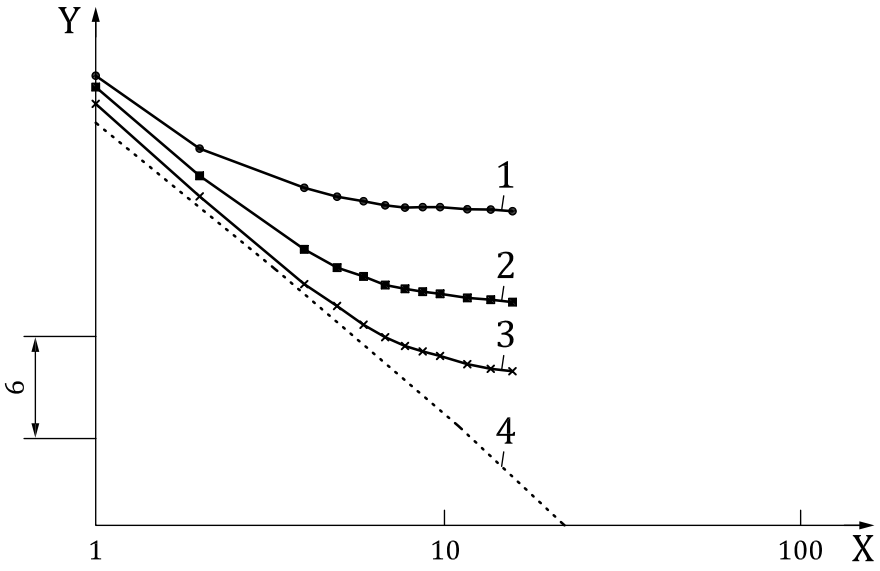

Key

X distance from source, in m

Y sound pressure level, L_p, in dB

1 reflecting floor, walls and ceiling

2 with absorption at ceiling

3 with absorption at ceiling and walls

4 without reflections (free field)

NOTE All three dimensions of the room are of the same order of magnitude.

Figure 8 — Typical spatial sound distribution curve for a room with diffuse field conditions, without and with several surface treatments

© ISO 2020 – All rights reserved
Dit document is door NEN onder licentie verstrekt aan: / This document has been supplied under license by NEN to:
politie.nl thijs.ter.avest@politie.nl 2026-03-06 15:04:00

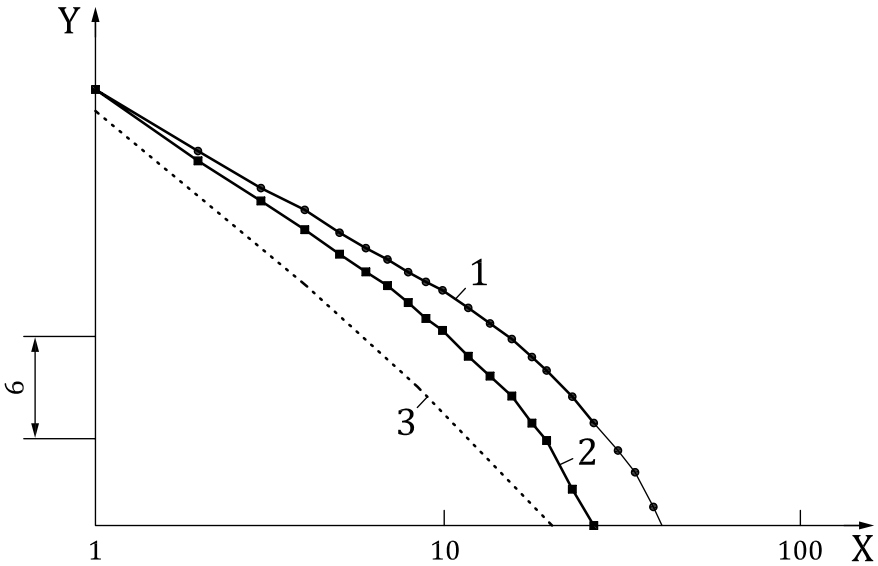

Key

X distance from source, in m

Y sound pressure level, L_p, in dB

1 Scattering objects and reflecting ceiling

2 Scattering objects and absorbent ceiling

3 without reflections (free field)

NOTE The height of the room is much smaller than the other two dimensions.

Figure 9 — Typical spatial sound distribution curve for a fitted room without diffuse field conditions, with and without sound-absorbing ceiling

The combination of surface treatment and noise barriers is normally quite effective and leads to a noise level reduction which is substantially higher than that obtained with only one of these measures (see Annexes E and F). In addition to the noise reduction which can be measured objectively, there will be an important subjective improvement.

More information on surface treatment is given in Annex F.

6.4 Sound propagation in structures and noise control measures

Transmission of airborne noise into adjacent rooms or into the open is reduced by increasing the sound insulation of walls, ceilings, windows and doors (see Annex H).

Propagation of structure-borne sound should be prevented initially as it is very difficult to eliminate once in the structure. Measures to reduce the transmission of airborne and structure-borne sound (see Annexes G and H) should be considered at the planning stage, otherwise their implementation may not be feasible.

7 Noise control at the work station

Noise control measures at the source and on the transmission paths can be supplemented by further measures taken at the work station, for example with screens and cabins (see Annexes E and I).

© ISO 2020 – All rights reserved

Dit document is door NEN onder licentie verstrekt aan: / This document has been supplied under license by NEN to:
politie.nl thijs.ter.avest@politie.nl 2026-03-06 15:04:00

8 Verification methods

8.1 General

Sound sources, noise control devices, sound propagation, noise levels in workplaces and sound insulation of buildings are described by acoustical quantities. These acoustical quantities and sound level reductions by means of specific measures are frequently determined or agreed upon in plans, programmes and contracts. The value of these acoustical quantities and the success of noise control measures should be verifiable *in situ*. When comparing these values with the verified ones, the uncertainty should be taken into account.

8.2 Sound sources

The declaration of noise emission can be verified by using the methods given in ISO 4871. Noise emission data should be verified by using the machine-specific noise test code and the basic standards for noise emission measurement (the ISO 3740 series, the ISO 9614 series and the ISO 11200 series). When verifying the declared values, it is essential that the operating and mounting conditions are the same as those specified in the noise emission declaration or machine documents. The noise control measures are assessed by determining the difference in noise emission.

8.3 Noise control devices

The effectiveness of noise control devices can be measured and verified by using the insertion loss, transmission loss or the reduction of sound pressure levels (see Annexes C, D, E and I). The buyer and seller should agree on which descriptor to use.

8.4 Workroom

The acoustic quality of workrooms and offices can be assessed by using the following sound propagation parameters: spatial decay (DL_2) and excess (DL_f) of sound pressure level and reverberation time. These three quantities can be measured or calculated (see ISO/TR 11690-3). Values agreed upon between the parties at the planning stage are usually calculated. Verified values are measured.

Verification method: an omnidirectional sound source of known sound power should be used. The source should be located near the floor with the measurement points all set at the same height. The influence of a directional characteristic of the source can be avoided if the source is rotating and the sound pressure level is integrated at each measurement point.

Sound propagation should be determined for the overall sound pressure level with a given frequency distribution or in octave bands. Normally, it is measured on a path that ensures a clear line of sight between the source and measurement point. When comparing the given and the verified values, it is essential that the path and the range of distances be the same.

When measuring the spatial sound distribution curve, the sound pressure level behind obstacles such as machines (e.g. at work stations) can be up to 10 dB lower (on average 3 dB to 4 dB) than the sound pressure level measured on a path with a clear line of sight. These differences must be taken into account when the spatial sound distribution curve in rooms and the sound pressure level at the work station are to be determined.

8.5 Specified positions, work stations

The effectiveness of noise control and the noise immission can be determined and verified by taking into account the sound pressure level at specific positions, normally the work stations. The acoustical conditions present following the deployment of noise control measures can be compared to those proceding them only if the operating conditions and the measurement method used are identical.

© ISO 2020 – All rights reserved
Dit document is door NEN onder licentie verstrekt aan: / This document has been supplied under license by NEN to:
politie.nl thijs.ter.avest@politie.nl 2026-03-06 15:04:00

9 New technologies

In some cases, it may be necessary to consider noise control strategies offered by the application of new technologies.

Annex J gives some information on one of these technologies: anti-noise active/adaptive techniques where the undesired mechanical and/or acoustical waves interfere destructively with artificially generated ones in the opposite phase. No such systems are commercially available for workplaces as yet.

© ISO 2020 – All rights reserved

Dit document is door NEN onder licentie verstrekt aan: / This document has been supplied under license by NEN to:
politie.nl thijs.ter.avest@politie.nl 2026-03-06 15:04:00

Annex A
(informative)

Modification or replacement of machine components

A.1 Restriction of noise generation and transmission

The following procedures are recommended.

a) Avoid impacts or rapid movements. Replace them with uniform processes (slow progressive motion). Restrict impact noise by reducing impact velocities (e.g. reduce drop height, use smaller masses). Use damping materials on impact surfaces (e.g. sandwich or elastic materials).

b) Avoid using piping arrangements with flow-restricting designs; select larger radii bends or design the system with continuous cross-sections rather than discontinuous ones.

c) Use multitube nozzles instead of a single large one in discharge openings.

d) Avoid using speeds close to the speed of sound and prevent cavitation by using multiple pressure-relief valves.

e) Install inner gear system pumps instead of axial piston pumps.

f) Use plastic gear wheels if mechanical loading requirements allow this.

g) Install helical gearing instead of spur-toothed gears.

h) Ensure tolerances are adhered to when using parts where surface quality is essential for machine parts with friction rolling contact.

i) Ensure all rotating masses are balanced.

j) Select low-noise bearings (friction bearings are generally quieter than rolling bearings).

k) Ensure that the installation provides optimum performance.

l) Select materials giving the best combinations (e.g. plastic/steel) and surface lubrication of elements with friction contact.

m) Design the system so that the most acoustically favourable force-transmission method is used (e.g. elastic couplings or hydraulic gears, toothed, V or flat belts, friction wheel drives instead of gearwheel drives, helical-tooth and/or ground gears); select gearwheel pairs where one gearwheel is of a material with high internal damping; use direct drive by multipole or speed-regulated motors.

A.2 Reduction of noise radiation

The following procedures are recommended.

a) Use perforated plates with an open area of about 30 % (if no insulation of airborne sound is necessary).

b) Use materials with high internal damping (e.g. grey cast iron, sandwich plates, plastics).

c) Limit the transmission of structure-borne sound to radiating surfaces.

d) Restrict airborne sound by the use of panels with high mass or use a double wall and fill the cavity with acoustically absorbent material.

© ISO 2020 – All rights reserved
Dit document is door NEN onder licentie verstrekt aan: / This document has been supplied under license by NEN to:
politie.nl thijs.ter.avest@politie.nl 2026-03-06 15:04:00

e) Line the inner surfaces of casings with acoustically absorbent material; this is especially effective if little structure-borne sound is transferred to the casting surfaces.

f) Seal all openings which are not required and grout all joints.

g) Provide noise absorbers in areas where openings are required or design acoustic openings.

NOTE More design rules can be found in ISO/TR 11688-1.

© ISO 2020 – All rights reserved

Dit document is door NEN onder licentie verstrekt aan: / This document has been supplied under license by NEN to:
politie.nl thijs.ter.avest@politie.nl 2026-03-06 15:04:00

Annex B
(informative)

Arrangement of sound sources

B.1 General

The following procedures are recommended.

B.2 Location of high-noise sources together in order to minimize their effect on remote work stations

Placing two equally loud noise sources together increases the total noise level by 3 dB. However, if two noise sources are placed some distance apart, the surrounding area of each of them is affected.

B.3 Location of the noisiest sources

Where the production process allows, high-noise machines should be separated from quieter ones. This can be done by locating high-noise sources in separate rooms, or by the retrospective installation of partitions with effectively sealed doors. When a number of high-noise machines are concentrated in a single room, the A-weighted noise level generally rises by only a few decibels. This increase can be compensated for by an appropriate treatment of the room surfaces.

B.4 Arrangement of ancillary tasks

Low-noise tasks should be separated from noisy ones. Ancillary tasks which are not directly connected to noise sources, for example, cleaning, maintenance and repair work on individual parts, production task preparation, further processing of production (packaging, etc.), should be carried out in separate low-noise areas.

B.5 Use of remote control

Where practicable, remote-control systems should be used. These enable the operator to be moved to a greater distance from the noise source or the operator can control the equipment from a noise controlled cabin.

© ISO 2020 – All rights reserved
Dit document is door NEN onder licentie verstrekt aan: / This document has been supplied under license by NEN to:
politie.nl thijs.ter.avest@politie.nl 2026-03-06 15:04:00

Annex C
(informative)

Enclosures

Various designs of enclosures will provide varying noise reductions, measured for example as insertion loss, depending on the noise spectrum of the source. The noise reduction achieved is lower if the noise source emits predominantly low-frequency sound.

Typical reductions of A-weighted sound pressure levels are:

— approximately 5 dB to 10 dB for sound-insulating wrapping;

— approximately 10 dB to 25 dB for single-shell enclosures with sound-absorbing lining;

— more than 25 dB for double-shell enclosures with sound-absorbing lining.

Figure C.1 gives typical values of the noise reduction, as a function of frequency, for different enclosure and machine configurations.

Openings drastically reduce the effectiveness of enclosures, especially at high frequencies. Therefore, the open areas should be kept to a minimum. For example, for enclosures with leak ratios of 10 %, 1 % or 0,1 %, the reduction of A-weighted emission sound pressure levels is limited to 10 dB, 20 dB or 30 dB.

Very high values of noise reduction are only obtained with well-designed complete enclosures with solid-borne sound-insulating mounting and without openings or with openings fitted with silencers or lined ducts or properly sealed doors.

The effectiveness of an enclosure decreases with time unless very careful maintenance is performed.

ISO 11546-1 and ISO 11546-2 give methods for the measurement of the effectiveness of enclosures.

© ISO 2020 – All rights reserved

Dit document is door NEN onder licentie verstrekt aan: / This document has been supplied under license by NEN to:
politie.nl thijs.ter.avest@politie.nl 2026-03-06 15:04:00

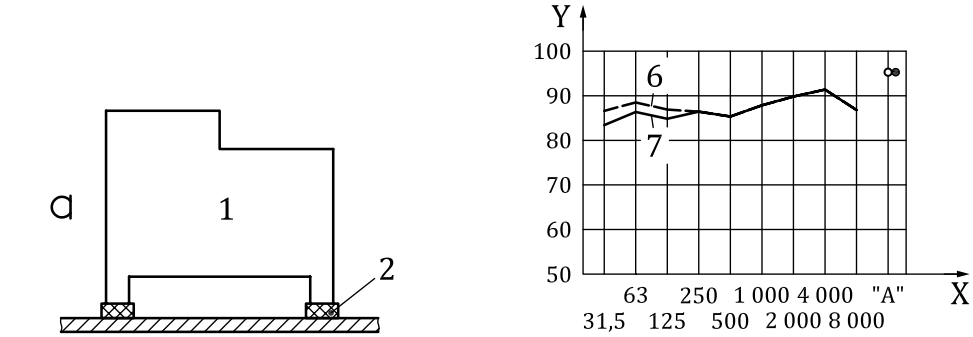

a)

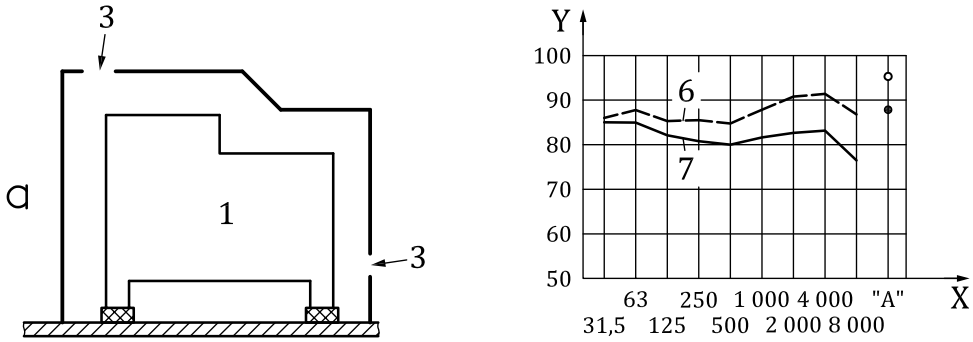

b)

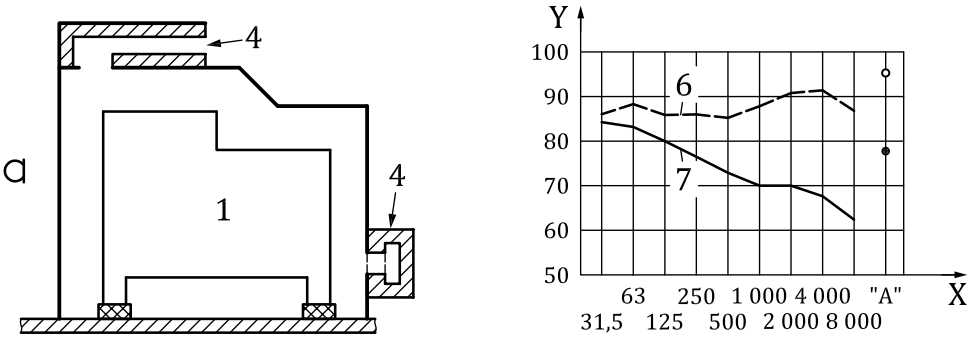

c)

© ISO 2020 – All rights reserved
Dit document is door NEN onder licentie verstrekt aan: / This document has been supplied under license by NEN to:
politie.nl thijs.ter.avest@politie.nl 2026-03-06 15:04:00

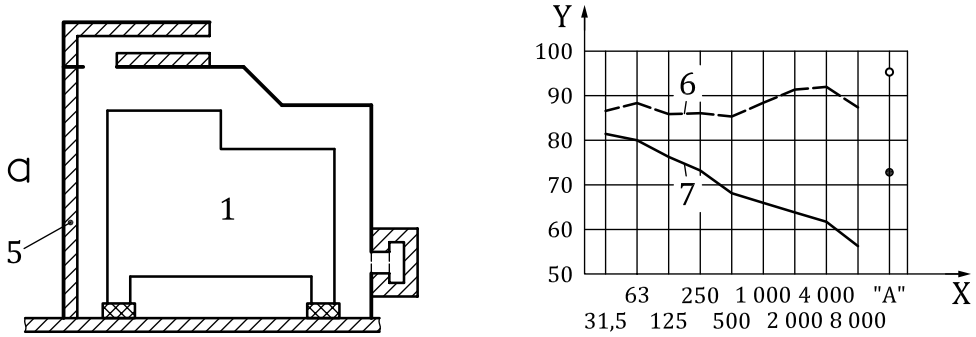

d)

Key

◁	microphone	3	ventilation openings
X	octave-band frequency, in Hz	4	lined ducts for ventilation
Y	sound pressure level, in dB	5	sound absorbing material
1	machine	6	initial
2	vibration isolators	7	modified

Figure C.1 — Typical noise reduction achieved for different machine and enclosure configurations

© ISO 2020 – All rights reserved

Dit document is door NEN onder licentie verstrekt aan: / This document has been supplied under license by NEN to:
politie.nl thijs.ter.avest@politie.nl 2026-03-06 15:04:00

Annex D
(informative)

Silencers

Silencers can be categorized as follows, according to the physical action brought into play:

a) **reactive-type silencers** (reflection-type and resonator-type), used for instance in internal combustion engines and effective in specific frequency ranges;

b) **throttle silencers**, used mainly in blow-out operations (high pressure loss);

c) **dissipative silencers**, based on absorbing linings, used mainly for fans, blowers, compressors and air-conditioning systems.

Frequently, a combination of the above is used. All types of silencers have frequency-dependent absorption. It is essential that the choice of a silencer is based on the preliminary knowledge of the frequency content of the noise to be attenuated and on the practical conditions of use, such as

— presence of particles, moisture and corrosive constituents in the fluid,

— mass flow,

— pressure,

— temperature,

— allowable pressure loss,

— installation situation.

In practice, noise level reduction ranges approximately from 10 dB to 20 dB. Larger values are sometimes achieved.

The following International Standards give methods for the measurement of the effectiveness of some types of silencers: ISO 7235, ISO 11691 and ISO 11820.

© ISO 2020 – All rights reserved
Dit document is door NEN onder licentie verstrekt aan: / This document has been supplied under license by NEN to:
politie.nl thijs.ter.avest@politie.nl 2026-03-06 15:04:00

Annex E
(informative)

Noise barriers and screens in rooms

Noise barriers and screens generally consist of sheets of steel, wood, glass or plastic. They should be covered by sound-absorbing linings on the side facing the source.

Noise barriers and screens can be used in workplaces where the aim is to prevent direct noise radiation from reaching a point of immission. Furthermore, they can be used to separate noisy areas in a room from the rest of the room, especially in the form of partial-height partitions or lateral enclosures. Separation improves as the remaining connecting surface of the room cross-section decreases and as the absorption on the part of the wall and ceiling surfaces adjacent to the connecting surface increases. Typically, reductions of A-weighted sound pressure levels of up to 10 dB can be achieved.

In workrooms without surface treatment, a noise reduction (measured as insertion loss in the 1 kHz octave band) of more than 5 dB can only be achieved by barriers and screens of more than half the room height and for distances between the source and the receiver of less than three times the room height.

Noise barriers and screens are most effective when they are combined with wall and ceiling treatments, and the combination should be used when all other measures are not practicable.

ISO 11821 gives a method for the measurement of the in situ effectiveness of removable screens. ISO 10053 gives a method for the measurement of the effectiveness of office screens.

© ISO 2020 – All rights reserved

Dit document is door NEN onder licentie verstrekt aan: / This document has been supplied under license by NEN to:
politie.nl thijs.ter.avest@politie.nl 2026-03-06 15:04:00

Annex F
(informative)

Acoustical treatment of surfaces

F.1 Rooms with a diffuse field

In such rooms, and at a certain distance from the source, the sound pressure level is constant (see Figure 8).

It is only in this ideal case that the reverberation time, T, can be used to determine the noise level reduction in the diffuse sound field when a certain absorption is added.

The noise level reduction yielded by surface treatment can be easily calculated from the total absorption areas (A_1, A_2) or the reverberation times (T_1, T_2), where indices 1 and 2 indicate the values before and after treatment, respectively:

$$10 \lg (A_2/A_1) \text{ or } 10 \lg (T_1/T_2)$$

The reverberation time (in seconds) in a room under diffuse-field conditions is given by

$$T = 0{,}16 \cdot V/A \tag{F.1}$$

where

V is the volume of the room, in cubic metres;

A is the equivalent absorption area of the room (in square metres) given by the partial surfaces, S_i, of the room and the respective absorption coefficients, α_i (see ISO 11690-1):

$$A = \sum S_i \alpha_i$$

Examples of the mean absorption coefficient $\bar{\alpha}$ are given in Table 2 and Table F.1.

Table F.1 — Mean sound absorption coefficient $\bar{\alpha}$ in the frequency range 500 Hz to 2 000 Hz for nearly cubic rooms without sound-absorbing treatment

Room utilization	$\bar{\alpha}$
Rooms with equipment such as compressors, fans, etc.	0,05 to 0,1
Metal-processing halls, machine rooms	0,1 to 0,2
Wood-processing halls	0,1 to 0,25
Textile industry (e.g. weaving and spinning mills)	0,2 to 0,25
Office rooms	0,15 to 0,2

F.2 Rooms with a non-diffuse field

In such rooms, parameters describing spatial sound propagation are used to assess the effectiveness of a surface treatment.

© ISO 2020 – All rights reserved
Dit document is door NEN onder licentie verstrekt aan: / This document has been supplied under license by NEN to:
politie.nl thijs.ter.avest@politie.nl 2026-03-06 15:04:00

F.3 Practical hints on surface treatment

Some features of surface treatment are as follows.

a) If the density of noise sources in a room is very high, work stations are necessarily close to noise sources but surface treatment can, nevertheless, be beneficial if the sound field in the vicinity of a source is dominated by the sound coming from other sources and reflected by room boundaries.

b) Surface treatments are particularly effective in rooms with acoustically hard boundaries.

c) Surface treatment should always be considered as a possible measure at the design stage of a workroom. At this stage, one has the opportunity to select wall and ceiling structures with sound-absorbing properties and, where relevant, in combination with heat insulation.

d) The sound absorption coefficient of materials used for wall treatment is frequency dependent (commonly used materials are most effective in the medium- and high frequency ranges). When choosing a surface treatment, it is therefore necessary to consider the frequency spectrum of the noise (octave band levels usually).

e) Surface treatment is most effective when located close to the noise sources.

f) Frequently, the subjective effectiveness of a surface treatment is greater than the objective one. One of the reasons is that the frequency spectrum has been shifted towards lower and hence less-annoying frequencies.

g) If, in an existing room, additional absorbing materials are used to cover the ceiling or walls, the absorption coefficient of the treated surface should be higher than 0,6 in the relevant frequency range.

When using noise barriers and screens, the noise level reduction is very poor unless these are combined with a surface treatment.

© ISO 2020 – All rights reserved

Dit document is door NEN onder licentie verstrekt aan: / This document has been supplied under license by NEN to:
politie.nl thijs.ter.avest@politie.nl 2026-03-06 15:04:00

Annex G
(informative)

Structure-borne sound insulation

Machines transmit vibrations to the structures to which they are connected (floor, walls, mounting elements, piping systems). Part of the energy is then radiated as sound.

Structure-borne sound insulation is therefore necessary if, for example, low noise levels are required in adjacent rooms.

Methods applicable for reducing airborne sound induced by structure-borne sound are the following.

a) Vibration isolation (mounting of the machine on appropriate vibration isolators). The mounting of the machine on a heavy, resonance-free foundation mass may be necessary.

b) Damping of the radiating structures (dissipation of structure-borne sound as heat).

c) In piping systems, flexible joints should be used or (if they are not practicable for operational reasons) claddings should be applied (damped metal sheets).

The use of appropriate fastening devices (damped springs, visco-elastic fasteners) prevents the transmission of structure-borne sound to the structures supporting the pipe.

In conveying systems, similar fasteners should be used, if necessary combined with additional lumps of mass, for example at crane rail supports.

© ISO 2020 – All rights reserved
Dit document is door NEN onder licentie verstrekt aan: / This document has been supplied under license by NEN to:
politie.nl thijs.ter.avest@politie.nl 2026-03-06 15:04:00

Annex H
(informative)

Airborne sound insulation of partitions

The airborne sound insulation of single-shell partitions depends largely on the mass per unit area. In general, an increase in airborne sound insulation of about 5 dB is obtained when the mass per unit area is doubled.

For the same mass per unit area of a partition and an appropriate acoustical design, double walls may have an airborne sound insulation which is about 10 dB higher than that of single-shell walls. The sound insulation is greatly influenced by mass and flexibility, cavity damping by sound-absorbing materials, the distance between shells and the avoidance of rigid connections between the shells. In the case of solid walls, improvements as high as 5 dB to 10 dB can be achieved by providing an appropriate extra sound-insulating front panel.

When estimating the noise insulation of walls and ceilings, it must be taken into account that, due to flanking transmission (sound that circumvents due to reflection, refraction, cracks, gaps or through structural pathways) the actual performance is somewhat less than the intrinsic performance of the panels used.

One should note that windows and doors often provide less noise insulation than the walls themselves. The resulting reduction of insulation depends on the ratio of the area of the windows and doors to the total area of the partition.

The degree of noise insulation required, as a function of the intended activity or use, should be established at the planning stage of a building. Strong noise sources should not be placed in rooms next to, for instance, a laboratory or a recreation room.

The ISO 10140 series gives methods for the measurement of sound insulation of building elements. The ISO 717 series gives methods for the rating of sound insulation in buildings and of building elements.

© ISO 2020 – All rights reserved

Dit document is door NEN onder licentie verstrekt aan: / This document has been supplied under license by NEN to:
politie.nl thijs.ter.avest@politie.nl 2026-03-06 15:04:00

Annex I
(informative)

Noise control at the work station

Persons exposed to high noise levels can be protected by sound-insulating cabins. Typical reductions of A-weighted sound pressure levels are between 15 dB and 30 dB. However, the cabin should be adequately ventilated. In many cases (e.g. where there is high heat exposure), it may be necessary to install an air-conditioning unit.

Sound-insulating cabins have the advantage of being easy to assemble or dismantle, and in many cases they are an effective noise control measure.

ISO 11957 gives a method for the measurement of the effectiveness of sound-insulating cabins.

Sometimes, barriers or partial enclosures can also be used at the work station or at communication locations (e.g. telephone points), their effectiveness being a reduction of A-weighted sound pressure levels of less than 10 dB, in general.

If the noise immission at the work station is too high after appropriate noise control measures have been implemented (see Clauses 4 to 7), personnel should wear hearing protection. When selecting the most appropriate hearing protectors in a specific case, comfort, hygiene and safety have to be considered together with the sound attenuation provided. Effective attenuations on site are lower than those found in catalogues of hearing protectors, because of improper use or because they are not used at all.

© ISO 2020 – All rights reserved
Dit document is door NEN onder licentie verstrekt aan: / This document has been supplied under license by NEN to:
politie.nl thijs.ter.avest@politie.nl 2026-03-06 15:04:00

Annex J
(informative)

Example of a new technology

J.1 Technique

Active noise and vibration control techniques are based on the creation of a destructive interference between acoustical or mechanical waves (see Figure J.1).

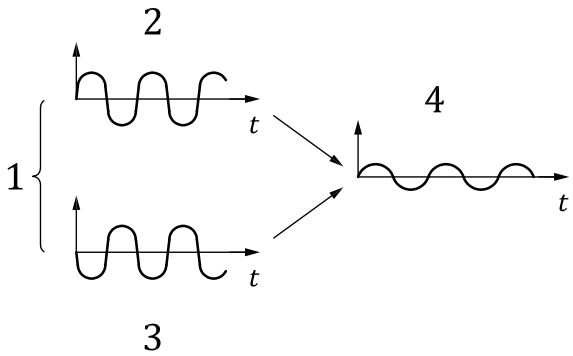

Key

1 noise level

2 noise wave form

3 cancelling wave form

4 residual error

t time

Figure J.1 — Cancellation mechanism

Active control techniques are effective mainly in the medium-to-low frequency range (see Figure J.2), that is in the range where the classical noise reduction measures lose their effectiveness.

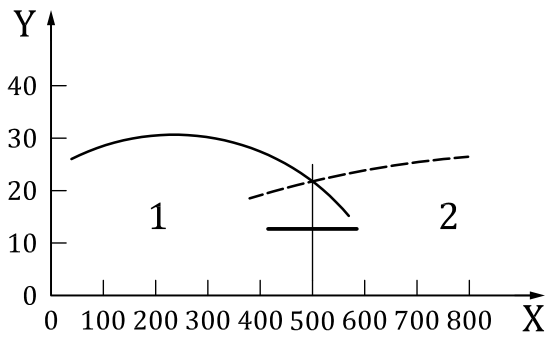

Key

X frequency, in Hz

Y attenuation, in dB

1 active control

2 passive control

Figure J.2 — Limit of application

© ISO 2020 – All rights reserved

Dit document is door NEN onder licentie verstrekt aan: / This document has been supplied under license by NEN to:
politie.nl thijs.ter.avest@politie.nl 2026-03-06 15:04:00

Noise reductions in this frequency range can reach 20 dB for stationary phenomena and 10 dB for time-dependent ones.

J.2 Applications

Possible industrial applications of active control concern the following.

a) **Noise**

Significant noise reduction can be obtained in closed or restricted spaces (zonal silencing), mainly in connection with repetitive phenomena.

The noise emitted at outlets from exhausts and ducts, for example in ventilation systems, can also be successfully reduced.

b) **Vibrations**

Two different approaches are possible:

— vibration cancellation,

— vibration isolation.

The first approach is usually applied to large and heavy structures, while the second one can be used on small light systems.

© ISO 2020 – All rights reserved
Dit document is door NEN onder licentie verstrekt aan: / This document has been supplied under license by NEN to:
politie.nl thijs.ter.avest@politie.nl 2026-03-06 15:04:00

Bibliography

[1] ISO 717-1, *Acoustics — Rating of sound insulation in buildings and of building elements — Part 1: Airborne sound insulation*

[2] ISO 717-2, *Acoustics — Rating of sound insulation in buildings and of building elements — Part 2: Impact sound insulation*

[3] ISO 3740, *Acoustics — Determination of sound power levels of noise sources — Guidelines for the use of basic standards*

[4] ISO 3741, *Acoustics — Determination of sound power levels and sound energy levels of noise sources using sound pressure — Precision methods for reverberation test rooms*

[5] ISO 3743-1, *Acoustics — Determination of sound power levels and sound energy levels of noise sources using sound pressure — Engineering methods for small, movable sources in reverberant fields — Part 1: Comparison method for a hard-walled test room*

[6] ISO 3743-2, *Acoustics — Determination of sound power levels of noise sources using sound pressure — Engineering methods for small, movable sources in reverberant fields — Part 2: Methods for special reverberation test rooms*

[7] ISO 3744, *Acoustics — Determination of sound power levels and sound energy levels of noise sources using sound pressure — Engineering methods for an essentially free field over a reflecting plane*

[8] ISO 3745, *Acoustics — Determination of sound power levels and sound energy levels of noise sources using sound pressure — Precision methods for anechoic rooms and hemi-anechoic rooms*

[9] ISO 3746, *Acoustics — Determination of sound power levels and sound energy levels of noise sources using sound pressure — Survey method using an enveloping measurement surface over a reflecting plane*

[10] ISO 3747, *Acoustics — Determination of sound power levels and sound energy levels of noise sources using sound pressure — Engineering/survey methods for use in situ in a reverberant environment*

[11] ISO 4871:1996, *Acoustics — Declaration and verification of noise emission values of machinery and equipment*

[12] ISO 7235, *Acoustics — Laboratory measurement procedures for ducted silencers and air terminal units — Insertion loss, flow noise and total pressure loss*

[13] ISO 9614-1, *Acoustics — Determination of sound power levels of noise sources using sound intensity — Part 1: Measurement at discrete points*

[14] ISO 9614-2, *Acoustics — Determination of sound power levels of noise sources using sound intensity — Part 2: Measurement by scanning*

[15] ISO 9614-3, *Acoustics — Determination of sound power levels of noise sources using sound intensity — Part 3: Precision method for measurement by scanning*

[16] ISO 10053, *Acoustics — Measurement of office screen sound attenuation under specific laboratory conditions*

[17] ISO 10140 (all parts), *Acoustics — Laboratory Measurement of sound insulation of building elements*

[18] ISO 11200, *Acoustics — Noise emitted by machinery and equipment — Guidelines for the use of basic standards for the determination of emission sound pressure levels at a work station and at other specified positions*

© ISO 2020 – All rights reserved

Dit document is door NEN onder licentie verstrekt aan: / This document has been supplied under license by NEN to:
politie.nl thijs.ter.avest@politie.nl 2026-03-06 15:04:00

[19] ISO 11201, *Acoustics — Noise emitted by machinery and equipment — Measurement of emission sound pressure levels at a work station and at other specified positions in an essentially free field over a reflecting plane with negligible environmental corrections*

[20] ISO 11202, *Acoustics — Noise emitted by machinery and equipment — Determination of emission sound pressure levels at a work station and at other specified positions applying approximate environmental corrections*

[21] ISO 11203, *Acoustics — Noise emitted by machinery and equipment — Determination of emission sound pressure levels at a work station and at other specified positions from the sound power level*

[22] ISO 11204, *Acoustics — Noise emitted by machinery and equipment — Determination of emission sound power levels at a work station and at other specified positions applying accurate environmental corrections*

[23] ISO 11205, *Acoustics — Noise emitted by machinery and equipment — Engineering method for the determination of emission sound pressure levels in situ at the work station and at other specified positions using sound intensity*

[24] ISO 11546-1, *Acoustics — Determination of sound insulation performance of enclosures — Part 1: Measurements under laboratory conditions (for declaration purposes)*

[25] ISO 11546-2, *Acoustics — Determination of sound insulation performance of enclosures — Part 2: Measurements in-situ (for acceptance and verification purposes)*

[26] ISO 11654, *Acoustics — Sound absorbers for use in buildings — Rating of sound absorption*

[27] ISO/TR 11688-1, *Acoustics — Recommended practice for the design of low noise machinery and equipment — Part 1: Planning*

[28] ISO/TR 11688-2, *Acoustics — Recommended practice for the design of low-noise machinery and equipment — Part 2: Introduction into the physics of low-noise design*

[29] ISO 11689, *Acoustics — Procedure for the comparison of noise emission data for machinery and equipment*

[30] ISO/TR 11690-3, *Acoustics — Recommended practice for the design of low-noise workplaces containing machinery — Part 3: Sound propagation and noise prediction in workrooms*

[31] ISO 11691, *Acoustics — Measurement of insertion loss of ducted silencers without flow —Laboratory survey method*

[32] ISO 11820, *Acoustics Measurements on silencers in situ*

[33] ISO 11821, *Acoustics — Determination of the in situ sound attenuation of a removable screen*

[34] ISO 11957, *Acoustics — Determination of sound insulation performance of cabins — Laboratory and in situ measurements*

[35] ISO 12999-1, *Acoustics — Determination and application of measurement uncertainties in building acoustics — Part 1: Sound insulation*

[36] ISO 16283 (all parts), *Acoustics — Field measurements of sound insulation in buildings and of building elements*

[37] IEC 61672-1, *Electroacoustics — Sound Level Meters — Part 1: Specifications*

[38] Acoustique prévisionnelle intérieure: Étude de cas. INRS, NST 53, Vandceuvre-les-Nancy, France, 1984

[39] Beranek L.L., Ver I.L. (eds). *Noise and Vibration Control.* Institute of Noise Control Engineering, Washington, 1988

© ISO 2020 – All rights reserved
Dit document is door NEN onder licentie verstrekt aan: / This document has been supplied under license by NEN to:
politie.nl thijs.ter.avest@politie.nl 2026-03-06 15:04:00

[40] Beranek L.L., Ver I.L. (eds). *Noise and Vibration Control Engineering: Principles and Applications.* John Wiley, New York, 1992

[41] Bies D.A., Hansen C.H. *Engineering Noise Control.* Unwin Hyman, London, 1988

[42] Cheremisinoff P.N., Cheremisinoff P.P. *Industrial Noise Control Handbook.* Ann Arbor Science, Michigan, 1977

[43] Cord H., Gatley W.S., Evenson H.A. *Noise Control for Engineers.* McGraw-Hill, New York, 1980

[44] Elvhammar H., Landström L. *Fight the Noise.* The Swedish Work Environment Fund, Stockholm, 1990

[45] Elvhammar H. *Handbok för ljudprojektering av industrilokaler (Acoustical Planning of Industry Premises — Handbook).* The Swedish Work Environment Fund, Stockholm, 1994. (In Swedish)

[46] Fahy F. *Sound and Structural Vibration: Radiation, Transmission and Response.* Academic Press, London, 1985

[47] Gamba R., Abisou G. (eds). *La protection des travailleurs contre le bruit — Les points clés. Collection Outils et Méthodes*, ANACT, Paris, 1992

[48] Harris C.M. (ed.). *Handbook of Noise Control.* McGraw Hill, New York, 1979

[49] Harris D.A., (ed.). Noise Control Manual. van Nostrand Reinhold, New York, 1992

[50] Heckl M., Müller H.A. *Taschenbuch der Technischen Akustik.* Springer Verlag, Berlin, 1975

[51] Horns H., Wettschurek R. *Katalog lärmmindernder Massnahmen in der Fertigung — Metallverareitung. BAU-Bericht, Fa 17*, Wirtschaftsverlag NW, Bremerhaven, 1989

[52] Sound solutions: Techniques to reduce noise at work. HSE books, Sudbury, UK, 1995

[53] Kurze U.J., Horns H. et al. *Lärmminderung am Arbeitsplatz III — Beispielsammlung. BAU-Bericht, Fa 14*, Wirtschaftsverlag NW, Bremerhaven, 1987

[54] May D.N., Handbook of Noise Assessment. van Nostrand Reinhold, New York, 1978

[55] Nelson P.A., Elliot S.J. *Active Control of Sound.* Academic Press, London, 1992

[56] *Noise Control Principles and Practice.* Danish Working Environmental Fund, 1980

[57] Petrusewicz S.A., Longmore D.K. *Noise and Vibration Control for Industrialists.* Elek Science, London, 1974

[58] Schirmer W. *Lärmbekämpfung.* Verlag Tribüne, Berlin, 1989

[59] Schmidt H. *Schalltechnisches Taschenbuch.* VDI Verlag, Düsseldorf, 1989

[60] Schmidt K.P., Harris H. *Lärmminderung am Arbeitsplatz II — Beispielsammlung. BAU-Bericht, Fa 13*, Wirtschaftsverlag NW, Bremerhaven, 1987

[61] Winkler A., Dietmann I., Middeldorf R. *Technische Massnahmen zur Lärmminderung in der Dünnblechverarbeitung. BAU-Bericht, Fa 3*, Wirtschaftsverlag NW, Bremerhaven, 1985

[62] *Rosenhouse, G Active Noise Control: Fundamentals for Acoustic Design*, WIT Press: Southampton, Boston, 2001

© ISO 2020 – All rights reserved

Dit document is door NEN onder licentie verstrekt aan: / This document has been supplied under license by NEN to:
politie.nl thijs.ter.avest@politie.nl 2026-03-06 15:04:00

ISO 11690-2:2020(E)

ICS 13.140

Price based on 31 pages

© ISO 2020 – All rights reserved
Dit document is door NEN onder licentie verstrekt aan: / This document has been supplied under license by NEN to:
politie.nl thijs.ter.avest@politie.nl 2026-03-06 15:04:00

Why do you have to pay for a standard?

Standards are agreements for and by the market. They are agreements about matters that concern everyone, e.g. about healthcare, financial services, safety and corporate social responsibility. Life would be a lot more complex without these agreements. Standards improve products, services and processes in the workplace, in our interactions with each other, and in society as a whole.

The agreements are made by interested parties. An interested party can be a producer, entrepreneur, service provider or user, but it can also be a government authority, a consumer association or a research organization. Broad support is important. The agreements are made with support from NEN, and they must not conflict with any other valid NEN standards.

NEN is a non-profit foundation. The services provided by NEN – from bringing parties together and making and recording the agreements, to providing assistance when applying the standards – cost money. That is why all the participating parties pay for the standardization process and you, as a user, pay for the standards, training courses and other products.

Dit document is door NEN onder licentie verstrekt aan: / This document has been supplied under license by NEN to:
politie.nl thijs.ter.avest@politie.nl 2026-03-06 15:04:00

Dit document is door NEN onder licentie verstrekt aan: / This document has been supplied under license by NEN to:
politie.nl thijs.ter.avest@politie.nl 2026-03-06 15:04:00